XCT40BR Truck Crane

Technical specifications



3rd edition, June 2025

Contents

Dimensions	5
Technical specifications	6-8
Configuration and optional equipment	9
Weights/working speedS	10
Boom/jib combinations	11
Load charts	12-16
Table of main technical parameters	17-18
Description of symbols	19-20
Notes	21

Dimensions

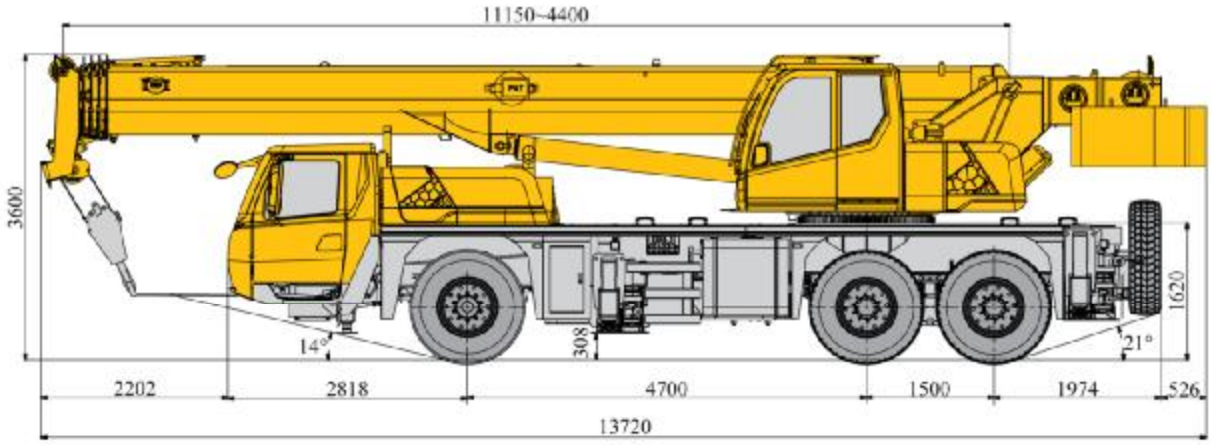
11150~4400
3600
1620
14°
308
21°
2202
2818
4700
1500
1974
526
13720

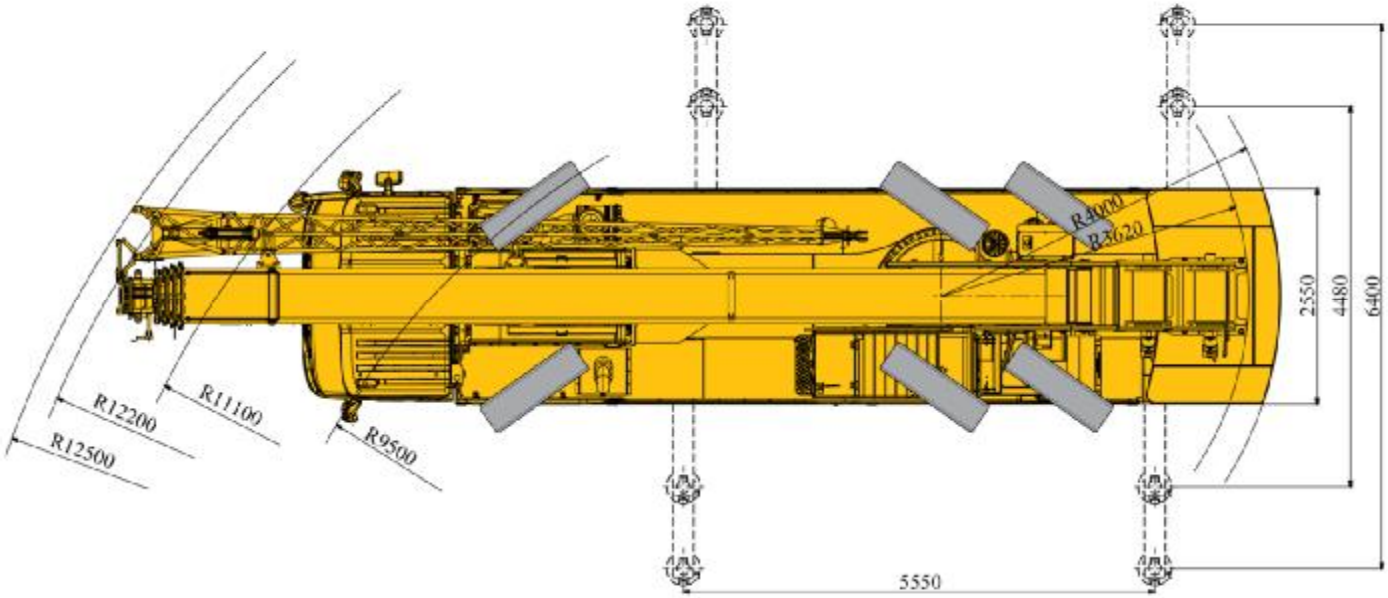
R4000
R3620
2550
4480
6400
R12200
R11100
R12500
R9500
5550

Technical specifications

Chassis

Frame	Designed and manufactured by XCMG, the frame is made of high strength steel with fully covered walking surface and anti-torsion box-typed structure.
Outriggers	Four outriggers, arranged in H-shape are hydraulically controlled by control levers. There are two outrigger control stations located at each side of the chassis, and there are two level gauges on each control station. The outrigger movements can be simultaneously or separately controlled on either side of the chassis. A 5th jack is equipped. There is a double-way hydraulic valve fitted in each jack cylinder. Outrigger float diameter: φ400 mm Reaction force of outrigger at maximum lifting load: 376 KN
Engine	WP10HG360E302, in-line, 6-cylinder, water cooled, electric control diesel engine, made by Weichai, with rated power of 265 kW/2100 rpm. Maximum torque: 1620 N.m/1200-1400 rpm, MAR-1 emission standard. Fuel tank capacity: 360 L
Transmission	9-speed FAST Transmission with synchronizer; mechanical control.
Axles	High strength axles. 1st axle are for steering, and 2nd and 3rd axles are for steering and driving.
Suspension	Front suspension: longitudinal leaf spring suspension, with cylindrical shock absorber. Rear suspension: double trailing arm balanced suspension, V-type upper control arm.
Tires	6 tires and 1 spare tire. All axles are equipped with single tire. Tire specifications: 385/95R25.
Brake system	Service brake: dual-circuit air pressure brake, all-axle disc brake acting on all wheels. ABS is standard. Parking brake: spring applied brake, acting on the wheels of axles 2-3. Auxiliary brake: hydraulic retarder brake.
Steering system	All-axle steering, mechanically steering mechanism with a hydraulic booster, and rear axle steering system.
Driver's cab	New full dimension steel structure cab features a spacious, panoramic, and multi storage layout. 3-man design, 7-inch combined instrument panel, human-machine interactive control panel, mechanical shock-absorbing seat for the driver, double-seat designed co-driver's seat that can be unfolded into a sleeper; radio, halogen headlights, electric window lifters, 5kW integrated air conditioning.
Electrical system	24 V DC, two sets of 12 V battery in series. Generator: 28 V-80 A

Technical specifications

Superstructure

Structure	Designed and manufactured by XCMG, made of high strength steel.
Hydraulic system	Constant gear pump driven by chassis engine, used for hoisting, luffing and telescoping operations. Load sensing proportional multi-way change valve with impact resistance valve and cavitation-proof valve integrated; air-cooled hydraulic oil cooler. Oil tank capacity: 600 L
Control system	Pilot hydraulic control is used for controlling the superstructure. All crane movements are controlled by hydraulic pump and proportional valve through two control levers at left and right sides.
Winch system	Equipped with Lebus grooved drum, driven by a hydraulic motor, with build-in planetary gear reducer, constant closed brake and balance valve. Wire rope has a rope head, which is directly installed in pouch socket. The main winch and auxiliary winch can be independently operated.
Slewing system	A single-row, four-point contact-ball external toothed slewing bearing is driven by hydraulic motor, with built-in planetary gear reducer and constant-closed brake equipped, and may continuously slew 360°. Power control and free slewing function as well as stepless speed regulation are available.
Operator's cab	Steel fully-enclosed 20° tiltable operator's cab features a spacious, panoramic, and multi storage layout. All-round view safety glass with an openable front window.Push-pull sliding door, protective grilles, pull-out step, front and roof wipers. Stylish interior design. Sun screens for front, rear and side windows; double-layer sun screen for the roof window.Mechanical shock-absorbing, spacious adjustable seat; dual LED lights; electric fan. LMI, HMI control panel, display, armrests, engine accelerator pedal, engine start switch, etc. Heating & air conditioning are available.
Safety devices	Hydraulic counterbalance valve, hydraulic relief valve, hydraulic double-way lock, LMI, anemometer and slewing beacon light are available. Lowering limiter is equipped in winch to prevent rope over-releasing. Anti-two block is fitted on the boom head to prevent rope over-winding. Winch monitoring device is equipped to monitor the winch status in real time. The boom monitoring device is equipped to monitor the status under the boom head.
Electrical system	24 V DC, two batteries in series.
Load moment indicator (LMI)	When the actual load moment is approaching the overloading value, audible and visual warning will be sent out, and the dangerous operation will be automatically cut off before overloading occurs.Overload memory function (black box) and fault diagnosis function are available.
Fixed counterweight	6.2 t
Hook block	30 t hook block
	3 t hook block
Luffing system	A front support dual-acting hydraulic cylinder is equipped for luffing operation, with a counterbalance valve fitted.

Technical specifications

	**Superstructure**
Boom	5-section boom with U cross-section, welding structure. Dual-cylinder wire-rope-type telescoping mechanism. Boom length: 11.2 m～44 m.
Jib	One-section lattice jib, welded structure. Three offset angles of 0°, 15° and 30°. Fixed jib length: 8.3 m.
Auxiliary sheave	Installed at the boom top, used for single line operation. Its lifting performance is the same as that for boom, but the maximum lifting load could not exceed 3000 kg.

Configuration and optional equipment

Configuration	Function description
Standard	5-section boom of 44 m, fixed jib of 8.3 m.

Note: only standard configuration is available for this model.

Optional equipment

Monitoring device assembly (winch monitoring device and boom head monitoring device included)
Data recorder
Outrigger pressure detection
Outrigger length measuring sensor
Electronic level gauge
Backup camera

Weights

	1	2	3	Total weight
t	12	12.	12	36
Main hook block is attached to the front of the driver’s cab; auxiliary hook block is attached and secured at the frame tail.				

	Parts of line	Weight of hook block (kg)	Dimensions (mm)	Remark
30 t	9	260	353×390×1202	Single-hook
3 t	1	60	236×236×518	Single-hook

Working speeds

		
385/95 R 25	2.5～80	50%

				
	0-135m/min, single line at 4th layer	35 kN	16 mm	190 m
	0-133 m/min, single line, 4th layer	35 kN	16 mm	115 m
	0-1.8 r/min			
	Approx. 38s for boom luffing from -2° to 79°			
	Approx. 110 s for boom extending from 11.2 m to 44 m			

Boom/jib combinations

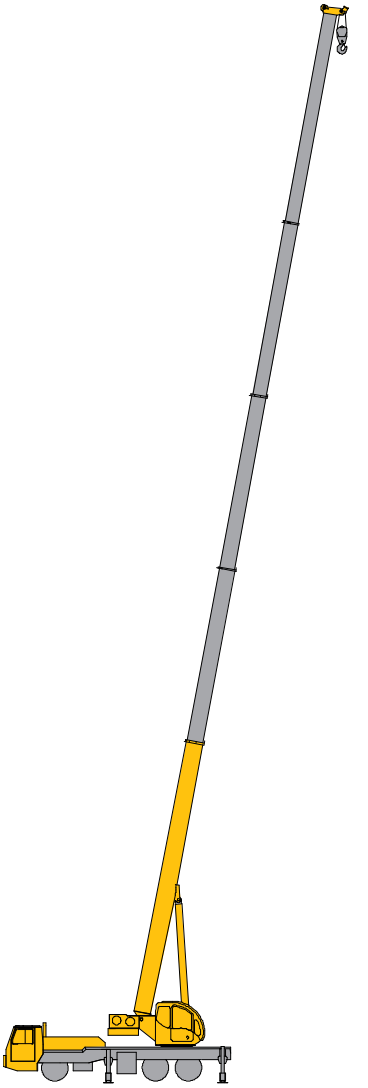

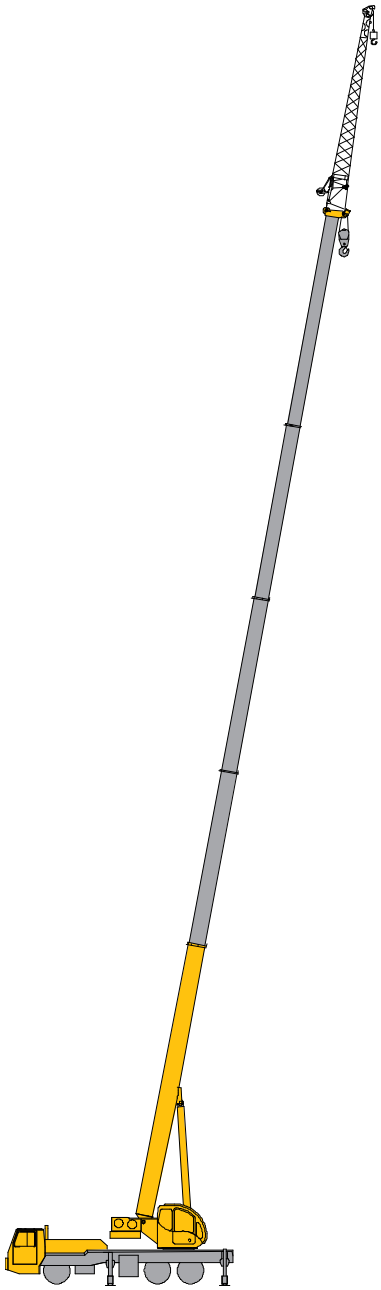

Boom	Jib
T:11.2~44 m	T:11.2~44 m J: 8.3 m

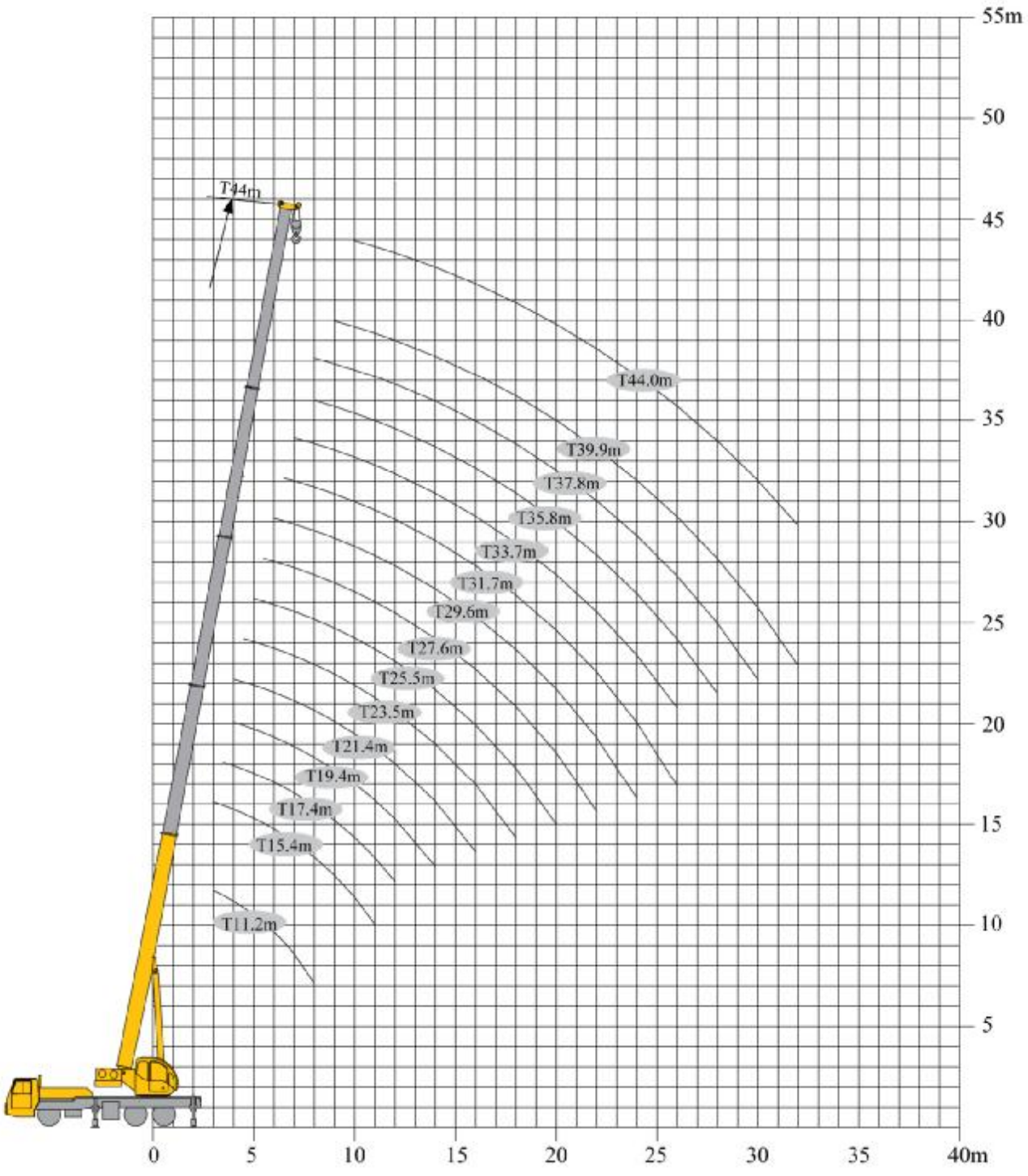
55m
50
45
40
35
30
25
20
15
10
5
0
5
10
15
20
25
30
35
40m
T44m
T44.0m
T39.9m
T37.8m
T35.8m
T33.7m
T31.7m
T29.6m
T27.6m
T25.5m
T23.5m
T21.4m
T19.4m
T17.4m
T15.4m
T11.2m










	11.2	15.3	19.4	25.5	31.7	37.8	44	17.3	23.5	29.6	
2.5	40000*										2.5
3	30000	25500									3
3.5	27000	25500						21000			3.5
4	26000	25000	21000					21000			4
4.5	25500	24000	21000					21000	19700		4.5
5	24600	23000	20600	19400				21000	19000		5
5.5	23000	22000	20200	18500				21000	18800		5.5
6	20000	20000	19000	18000				20000	18600	12000	6
7	17000	16500	16000	16000	13900			17600	17100	11600	7
8	14000	13800	13500	13700	12900	10400		15000	14700	11100	8
9		11300	11100	11800	11900	9800		12700	13100	10100	9
10		9900	9600	10500	10700	9200	7400	10600	11000	9300	10
12			6500	7300	7800	7600	6700	8200	8600	8000	12
14			4500	5300	5800	6100	6000		6500	6800	14
16				3900	4400	4700	4900		5100	5400	16
18				2900	3400	3700	3900		4100	4300	18
20				2100	2600	2900	3100			3500	20
22					2000	2300	2500			2900	22
24					1500	1800	2000			2400	24
26					1100	1300	1500				26
28						1000	1200				28
30						700	900				30
32							700				32

Note: * Capacity class










	35.8	21.4	27.6	33.7	39.9	
4		20000				4
4.5		20000				4.5
5		20000				5
5.5		20000	17600			5.5
6		19000	17600			6
7		17000	16500	11500		7
8	8600	14500	15000	11300		8
9	8500	12200	12700	10500	8300	9
10	8000	10200	10600	9700	7900	10
12	7000	7700	8200	8200	7200	12
14	6100	5600	6100	6400	6300	14
16	5400	4200	4700	5000	5200	16
18	4500		3700	3900	4100	18
20	3600		2900	3100	3300	20
22	3000		2200	2500	2700	22
24	2500			2000	2200	24
26	2100			1600	1800	26
28	1700				1400	28
30					1100	30
32					900	32

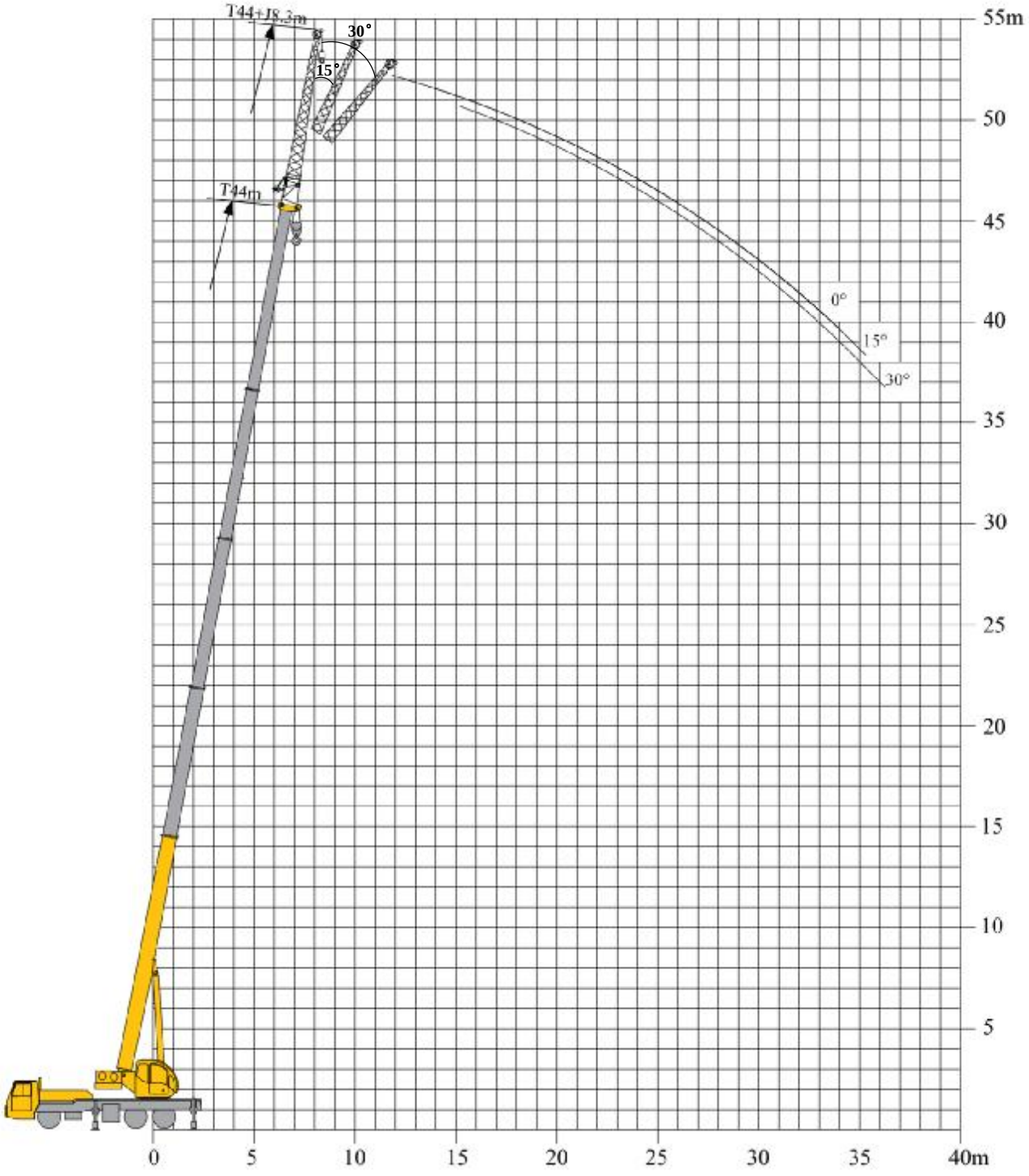
T44+J8.3m
30°
15°
T44m
0°
15°
30°
55m
50
45
40
35
30
25
20
15
10
5
0
5
10
15
20
25
30
35
40m












	0°	15°	30°	
	8.3			
78	3000	2700	1600	78
75	2900	2400	1400	75
72	2800	2200	1350	72
70	2700	2000	1200	70
65	1890	1710	1100	65
60	1260	1170	1000	60
55	810	720	720	55
50	450	450	450	50

Main technical specifications

Category	Item		Unit	Parameters
Dimensions	Dimensions (L×W×H)		mm	13720×2550×3600
	Wheel base		mm	4700+1500
	Track (front/rear)		mm	2145/2134/2134
	Front overhang/rear overhang		mm	2818/1974
	Front extension/rear extension		mm	2202/526
Weights	Maximum permissible total weight		kg	36000
	Axle load	Axle 1	kg	12000
		Axle 2	kg	12000
		Axle 3	kg	12000
Power	Engine model		——	WP10HG360E302
	Rated power/rotation speed		kW/(r/min)	265/2100
	Maximum output torque/rotation speed		N.m/(r/min)	1620/1200-1400
Travel	Maximum travel speed		km/h	≥80
	Minimum stable travel speed		km/h	2.5 ~ 3
	Minimum turning diameter		m	≤19
	Minimum turning diameter at boom head		m	≤24.4
	Minimum ground clearance		mm	308
	Approach angle		°	14
	Departure angle		°	21
	Braking distance (initial speed at 30 km/h)		m	≤10
	Maximum grade ability		%	≥50
	Fuel consumption per 100 km		L	40
Noise	Exterior noise level when accelerating		dB (A)	≤84
	Noise level at seated position		dB (A)	≤90

Main technical specifications

Category	Item			Unit	Parameters
Main performance	Maximum rated lifting capacity			t	40*
	Minimum rated working radius			m	2.5
	Slewing radius at turntable tail	At counterweight		mm	4000
		At auxiliary winch		mm	—
	Maximum load moment	Base boom section		kN.m	1240
		Fully-extended boom		kN.m	823
		Fully-extended boom + jib		kN.m	513
	Outrigger span	Longitudinal		m	5.55
		Lateral		m	6.4
	Lifting height	Base boom section		m	11.3
		Fully-extended boom		m	44
		Fully-extended boom + jib		m	52.3
	Boom length	Base boom section		m	11.2
		Fully-extended boom		m	44
		Fully-extended boom + jib		m	52.3
	Jib offset angle			°	0, 15, 30
Working speeds	Time for raising boom			s	≤38
	Time for fully extending the boom			s	≤110
	Maximum slewing speed			r/min	≥1.8
	Time for extending and retracting the outriggers	Outrigger beam	Retracting	s	≤20
			Extending	s	≤40
		Outrigger jack	Retracting	s	≤20
			Extending	s	≤40
	Hoisting speed (single line, 4th layer, unloaded)	Main winch system:		m/min	≥135
		Auxiliary winch		m/min	≥135
Noise	Exterior noise level			dB (A)	≤108
	Noise level at seated position			dB (A)	≤85

Description of symbols

	Superstructure		Boom
	Rated lifting load		Boom length
	Counterweight		Working radius
	Slewing radius of variable-position counterweight		Lifting height with boom
	Hook block		Boom angle
	Parts of line		Extension
	Boom length combination		Independent jib head
	Wind speed		Simple jib head
	Configuration		Fixed jib
	Optional equipment		Fixed jib length
	Wire rope length		Fixed jib offset angle
	Wire rope diameter		Luffing jib
	Maximum single line pull		Maximum lifting height
	Maximum working speed		Maximum working radius
	Main winch		Super lift
	Auxiliary winch		Wind power jib

Description of symbols

	Chassis
	Outrigger span
	Tires
	Axle load
	Grade ability
	Travel speed
	EN 13000 standard

	Luffing
	Telescoping
	Slewing
	360° slewing
	360° slewing with the 5th jack down
	Side and rear operation
	Operation over front
	Operation over rear

Notes

1. This manual is for reference only, and all information is for illustration only. It should not be relied on to operate the crane. For correct crane operating instructions, please refer to the operation manual and rated lifting load manual.
2. The load capacity values in the tables are stated in kg, which are the maximum total load capacity of the crane on a stable and even surface under the current boom length and radius, including the weight of hooks and riggings. The weight of the above devices must be subtracted during lifting operations.
3. The working radius is the horizontal gravity center distance of the load from the rotational axis of the crane superstructure measured at the ground.
4. Observe the boom angle limit. Never operate the crane with the boom angle beyond the recommended limit even if a load is not being carried.
5. A lifting operation is permissible only when the wind force is below grade 5 (instantaneous wind speed of 14.1 m/s, wind pressure of 125N/㎡).

Add: No. 68, Gaoxin Road, Economic and Technological Development Zone, Xuzhou, Jiangsu, P. R. China
Tel: +86-516-83462242
Quality Inquiry Tel: +86-516-87888268
Spare Parts Tel: +86-516-83461542
Post Code: 221004
Website: www.xcmg.com

Service Tel
400-110-9999

Do not copy without authorization!

This document is non-contractual. Constant improvement and engineering progress make it necessary that we reserve the right to make product model, specification and configuration changes without notice. Illustrations shown may include optional equipment and accessories and may not include all standard equipment. Some parts need to be purchased separately. Conform to the local laws for license application and road traveling.